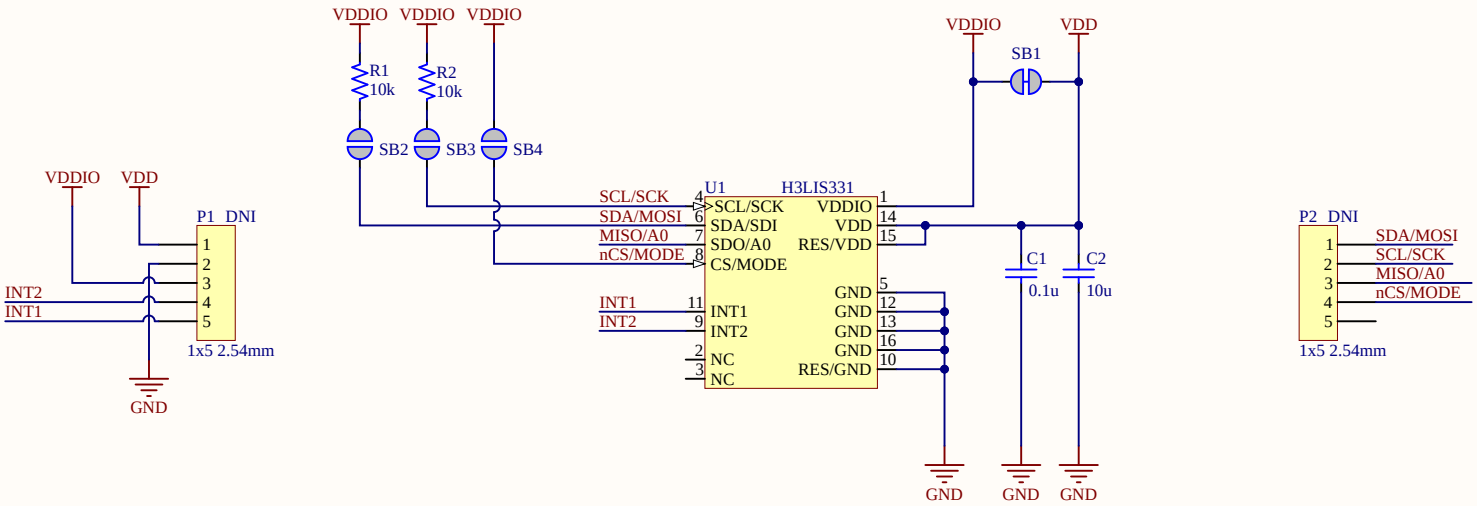

smMOTN-SX21002 CONFIGURATION:

DEFAULT = SPI Mode, Single Supply Operation
Dual Supply Mode = Cut SB1, Set VDDIO = 1.71-3.6V

Pin	I2C Setting	SPI Setting
I2C_B	LOW	HIGH
nCS	VDDIO	LOW
SDA/SDI	VDDIO	SB3 OPEN
SCL/SCLK	VDDIO	SB4 OPEN
SA0	LOW = I2C LSB=0	N/A
SA0	HIGH = I2C LSB=1	N/A

SPI NOTE:
FXAS21002 ONLY support SPI Mode 00
CPOL=0, CPHA=0 ACTIVE Clock State = HIGH / IDLE = LOW
Data Latched on rising edge of the clock and propagated on the falling edge.

Datasheet indicates timing parameters are based on bus capacitance of 80pF and 10K pull-up to VDDIO on each SPI interface pin(SCK, MOSI, MISO, nCS)

I2C Slave Addresses(SA)

CMD	A0	SA	R/W bit	SA Sent by I2C MSTR
Read	0	0x20	1	0x41
Write	0	0x20	0	0x40
Read	1	0x21	1	0x43
Write	1	0x21	0	0x42

Title *smACCEL-H3LIS331*			*Sensor Maestros LLC*
Size: Letter	Number:	Revision: 1.0	*Sensors That Make Sense*
Date: 7/5/2022	Time: 9:08:21 PM	Sheet 1 of 1	*www.sensormaestros.com*
File: smACCEL-H3LIS331.SchDoc			